Product Type: Heavy-duty connector pins

Product Name:SCSF-010-1

Product Description: 10A silver plated,Female,compatible with 1.0mm ^{2}

Product Size

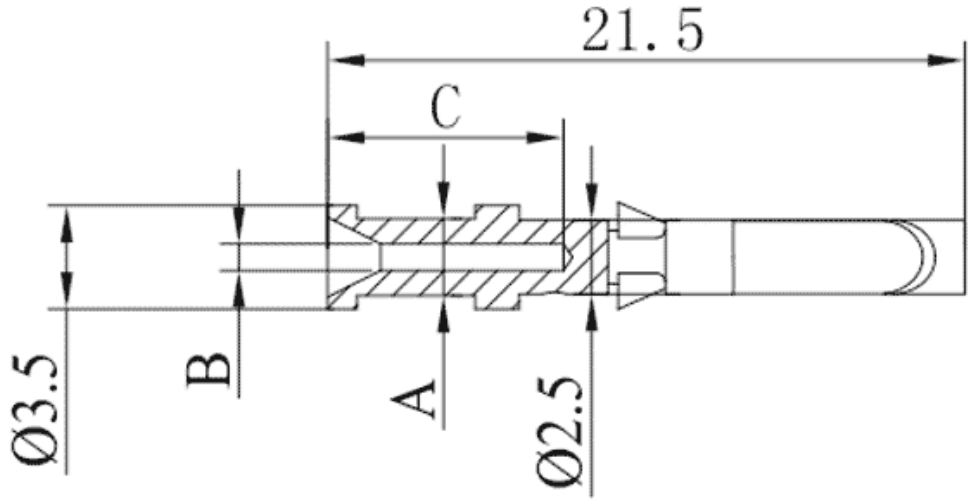

Parameters

SUPU ID	SCSF-010-1
Operating temperature range	-40°C～+125°C
Category	cold-pressed pin female terminal
Connection method	Crimp terminal

Mechanical endurance	≥500

Technical data

IEC Rated Current	10A
Contact/surface material	Hard-silver Plated
Pin Material	Copper Alloy
Contact resistance	≤3mΩ
Wire Specification	$1mm^2$/18AWG

Commercial data

Order No	SCSF-010-1
Packing unit	PCS
Minimum order quantity	1

Ningbo SUPU Electronics Co., Ltd.

Address: No. 150, Xinxing 4th Road, High-tech Industrial Development Zone,

Cixi City, Zhejiang Province, China

Zip code: 315303

Switchboard: +86 574-63288158

Fax: +86 574-63288170

E-mail:supucontact@supu.cn

Service Hotline: 400-626-6336

Wechat

The right to modify data belongs to SUPU.